

Fixed | Adjustable | Trimless | Pinhole | Pinhole Oval | Square | Dual Head

Antiglare Fittings | Explore more on page 250...

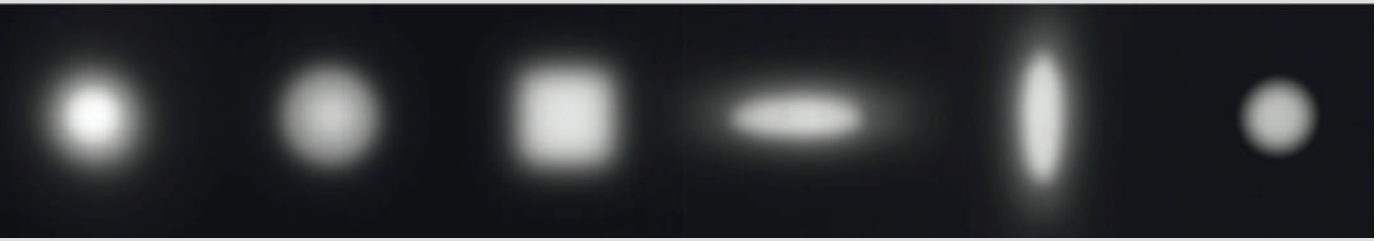

Clear Lens | Frosted Diffuser | Diamond Lattice Diffuser | Striped Diffuser | Honeycomb Mesh

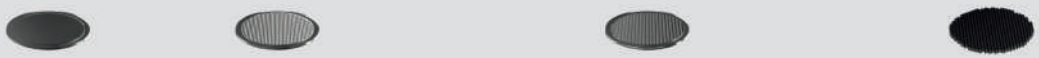

FIXED | ADJUSTABLE | TRIMLESS | PINHOLE | SQUARE

Reasonable installation structure can keep ceiling simple, natural with visual consistency.

Selecting suitable fittings to make a soft atmosphere.
Put the COB divided into small light beam.
Filter the spray light to make the light soft and not glaring.
Different diffuser can create different lighting effects.
natural with visual consistency.

Full range of spotlights, different needs and different choices Front rings are available in a variety of styles

Lifetime up to 100.000h
Ripple <1%
2 MacAdam step

Input Voltage: AC 220-240V
Power Factor: 0.95

THD<20%

Operation temperature: -25° +45°

5 years warranty
L90B10 @ 50.000h
Ambient temperature +24°

L80B10 @ 100.000h



Split Structure

Pre-embedded design, quick installation and convenient maintenance of fixtures Innovation and High Efficiency Black Light Mirror



Scale Mark

Increase the marking of rotation angle scale and make the angle of fixtures tilt up to 30 degrees.
Easy switching between direct illumination mode and wall wash mode.

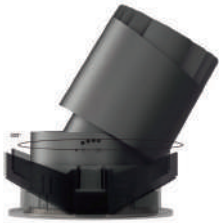

Locating Groove

Horizontal rotation 355 degrees, every rotation degree, are just right.
Four-stop tilt angle adjustment with positioning spot inside, and nipple resistance is just right.
Accurate control of beam angle and spot effect is realized, and more vivid emotion is given to space.



Suitable for a variety of plate thickness.

Fast screw tightening and easy installation
Suitable for all kinds of ceiling thickness, maximum to 30mm.



6mm 12mm 25mm

Luminous Efficiency

The fixture head can rotate freely in all directions from front to back. Let light move at will to maximize the value of light efficiency.





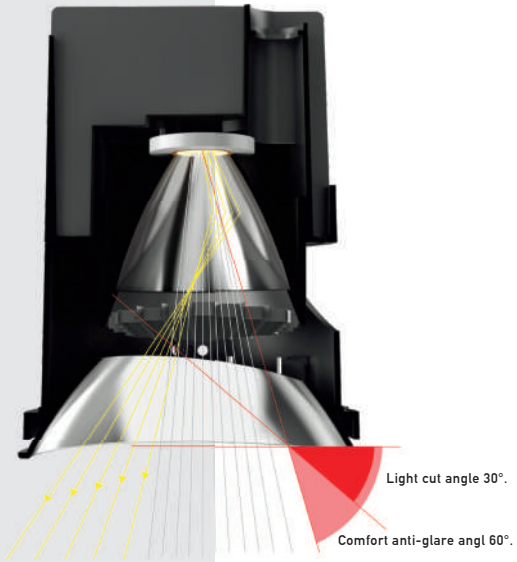

Dark Light Technology

Deeply hiden reflector UGR < 16
Increase the length between
the COB and the light outlet which can
improve the anti-glare performance.
The light is reflected from the reflector and
filtered by the anti-glare honeycomb
to decrease stray light effectively.

CRI>90

Super high color rendering, let objects
show their original colors Soft light and
shadow, full colors Reduce the Real Light
Effect Environment.

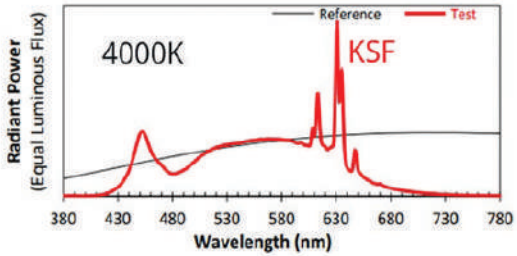

Antiglare Fittings

Selecting suitable fittings to make a soft
atmosphere.
Put the COB divided into small light beam.
Filter the spray light to make the light
soft and not glaring.
Different diffuser can create different
lighting effects.

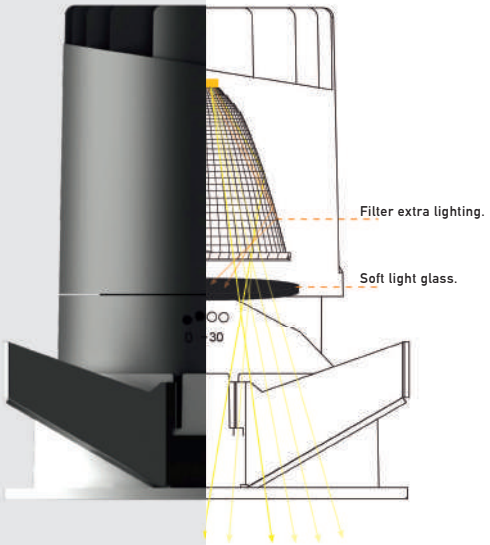

Frosted Diffuser...
The frosted lens can filter the light to
enforce the light diffusion effect,
so that decrease the glare and create
an even and soft light environment.

Striped Diffuser...
The function is to draw a circular spot into
an elliptical spot.
It can focus the spot in one direction,
illuminate the widest area in that direction,
and reduce light in other directions
mainly ellipse short axis direction (reduce
stray light).

Diamond Lattice Diffuser...
Square spot, through the atomization
or diffusion, make the light evenly softer,
decrease the glaring, and normally with
optical beam expanding effect.

Honeycomb Mesh...
It can prevent the stray light effectively,
let the straight light go through the mesh,
and get rid of the glare to protect our eyes.
UGR < 16.

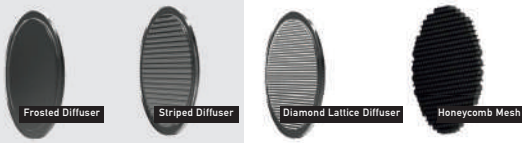

F90 LED Technology

For traditional LED technology, higher CRI results in a lower efficacy.
By replacing broadband red nitride phosphor with narrowband red Potassium Fluorosilicate (PFS or KSF) phosphor, the F90 LED products can achieve today's CRI80 LED efficacy with a CRI of 90. Lighting customers can simply replace their existing LEDs in their lighting products with the new F90 LEDs for CRI90 conversion.
Bridgelux's new family of F90 Series LEDs delivers a CRI of at least 90 and R9 of at least 50. The F90 2835 0.2W LED has a lumen efficacy ranging from 170 lm/W to 210 lm/W to meet the DLC (Design Lights Consortium®) V5.1
Standard for different lighting products including T8 lamps, troffers, high-bay, linear ambient, and case lighting. The F90 2835 1W LED has a lumen efficacy ranging from 139 lm/W to 160 lm/W for indoor directional lamps and downlights for commercial lighting. F90 LED products also meet the DLC Premium Lumen maintenance technical requirements L90≥36,000 hours.
F90 Series LEDs can be incorporated in virtually any luminaire (such as linear lamps, downlights, spotlights, high-bay) and can increase the vividness of strong red colors which is particularly desirable in retail applications.

Bridgelux F90™ is a family of white points designed for Bridgelux surface mount devices (SMD), V Series™ and V Series HD chip-on-board LED arrays, EB SeriesTM linear modules, and Vesta® tunable white COBs and modules.
Engineered to provide the highest CRI90 efficacy using proprietary chip, phosphor, and packaging technology. The high-fidelity spectral output of F90 creates stunning environments with excellent color rendering and outstanding TM-30 metrics.

HUMAN CENTRIC LIGHTING

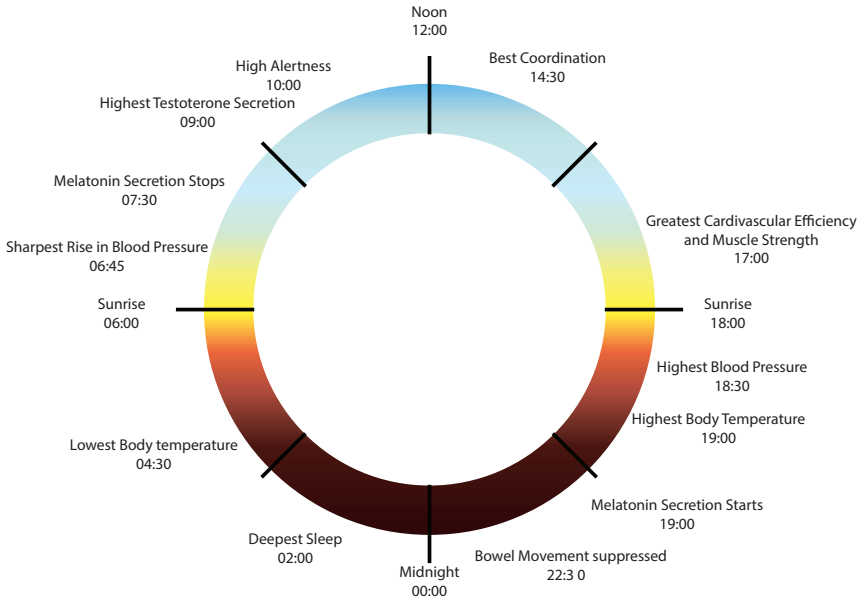

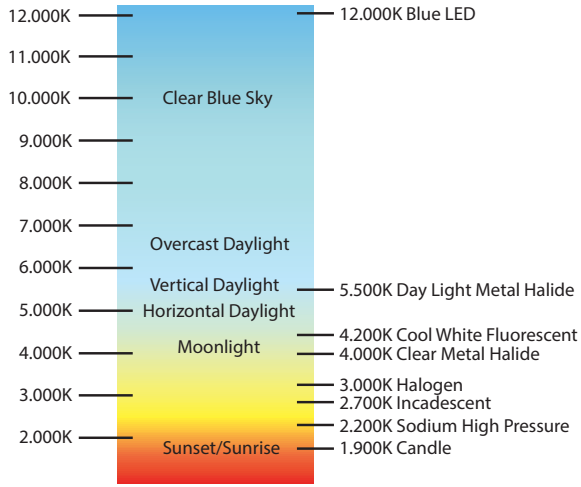

Dim to Warm & Tunable White Technology

Standard LEDs can be cold and blue, dimming down to a grey color reminiscent of the sky before a bad storm or – even worse – prison lighting. Science shows us that lumens and color temperature may even be harmful to our health, if exposed during the wrong hours of the day.
Dim to Warm and Tunable White technology change the LED landscape, giving us more variety and more control.
Dim to Warm does exactly what it sounds like – dim from cool to warm.
Dynamic / Tunable White is an LED system with a variable Kelvin color temperature range from 2000K to 4000K.

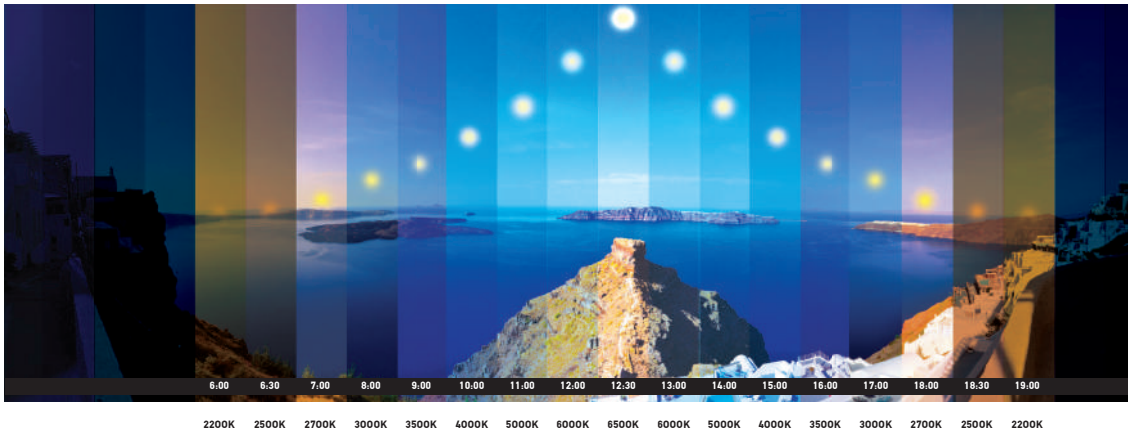

What is Dim to Warm

Dims like an incandescent, from cool to warm.

Color temperature becomes warmer as you dim, from 3000K or 2700K to 1800K.

Perfect for retrofit or remodel, no rewiring.

What is Tunable White

Control your color temperature, while maintaining brightness.

Adjust from 2700K to 6500K.

Modularization

Independently designed product appearance
Fastener modular structure, easy installation and maintenance



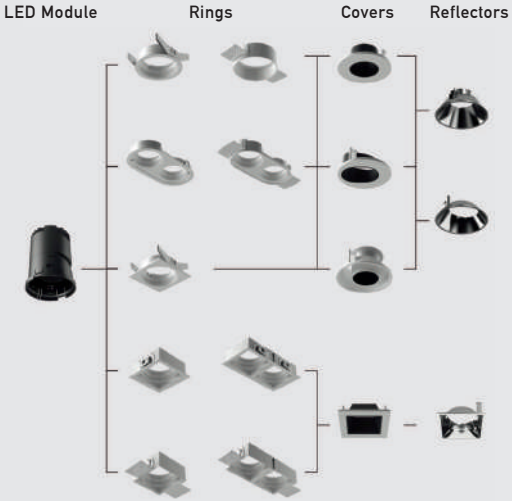



Fix
LED Module



Adjustable
LED Module

Beauty, more than one

There are 5 colors reflectors available to satisfy the needs of different occasions. Reflectors are precisely designed, electroplated and Nano-sprayed. Comfortable light type with high reflective efficiency and high efficiency.



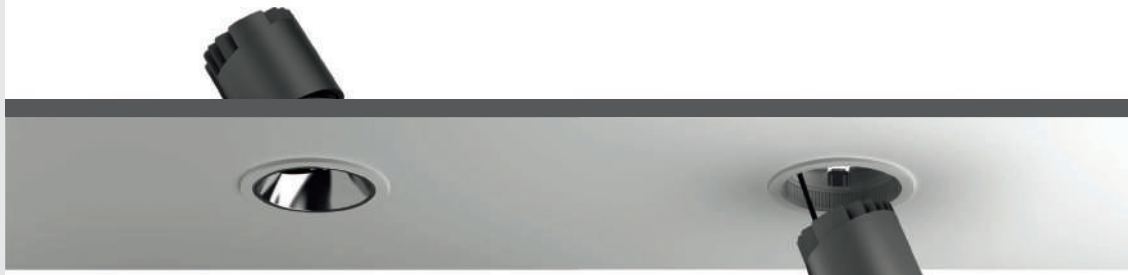

Installation method

Various installation specifications to meet different space and different visual needs.

